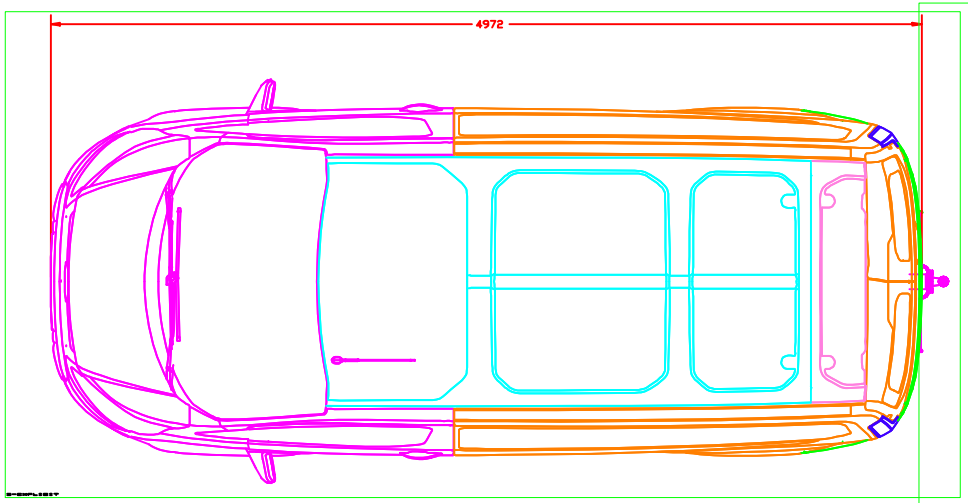

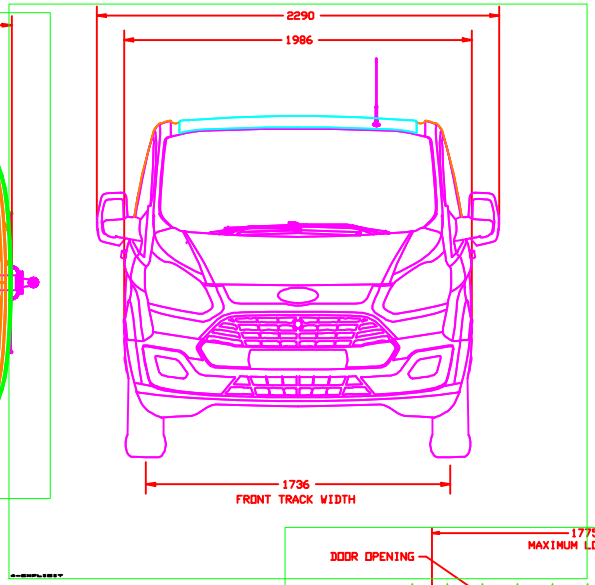

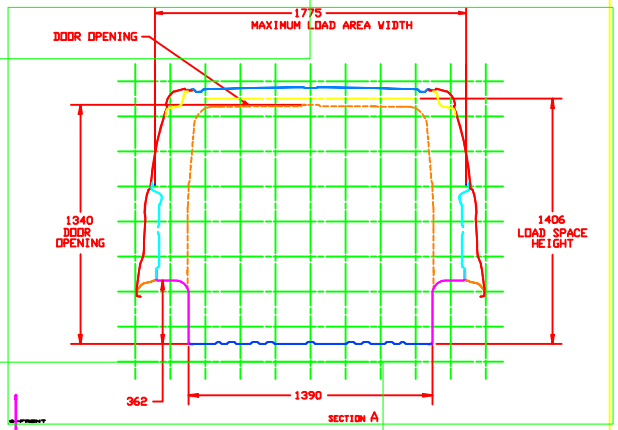

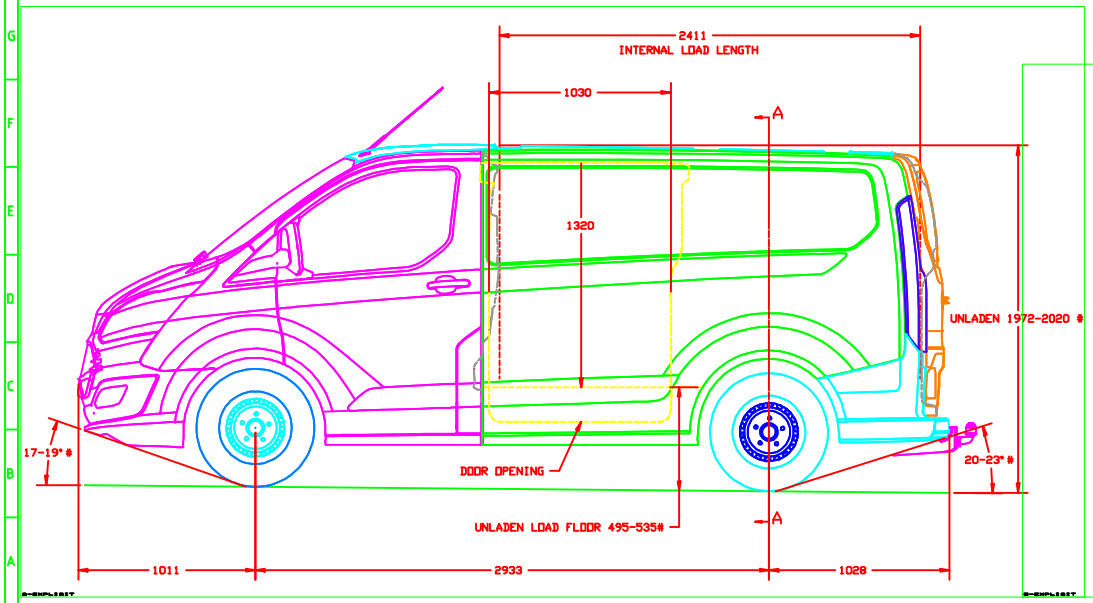

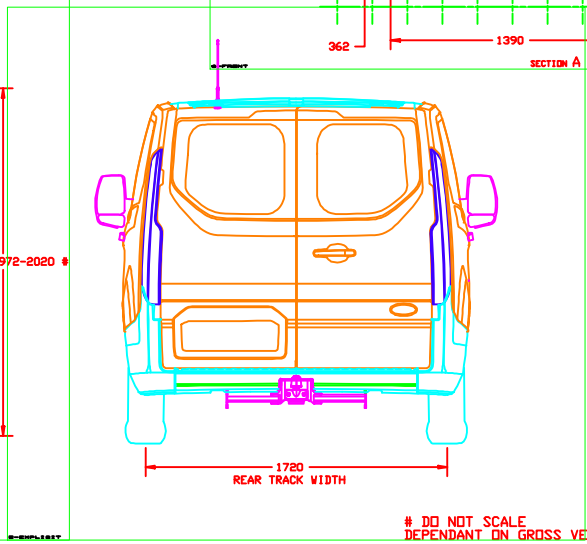

DO NOT SCALE
DEPENDANT ON GROSS VEHICLE MASS CLASS

LTRS	REVISIONS			
ORIGINATOR	CHECKER	ENGR APP	MATL APP	

REFERENCE

PART MUST COMPLY WITH RESTRICTED SUBSTANCE MANAGEMENT STANDARD WSS-M99P9999-A1 TO SAFEGUARD HEALTH, SAFETY AND THE ENVIRONMENT

DRAFTED IN ACCORDANCE WITH FORD MOTOR COMPANY ENGINEERING CAD AND DRAFTING STANDARDS VERSION

3RD ANGLE PROJ
DIMENSIONS ARE IN MILLIMETERS

CAD TYPE IDEAS	CAD LOC. TCE	CAD FILE DC-BK2V-010000-D001 ; 1	DTMC IS MASTER
OPER. NO.	UNIT	DRAWING DC-BK2V-010000-D001	
DESIGN GCLAR157	DETAIL GCLAR157	TITLE VAN-FWD SWB L/RF SRW RR DR	SHT 1 OF 1
CHECKED JVULF	SAFETY		
SCALE 1:20	DATE 11.10.24	DIVISION PLANT	

FORD MOTOR COMPANY

PRINTED COPIES ARE UNCONTROLLED